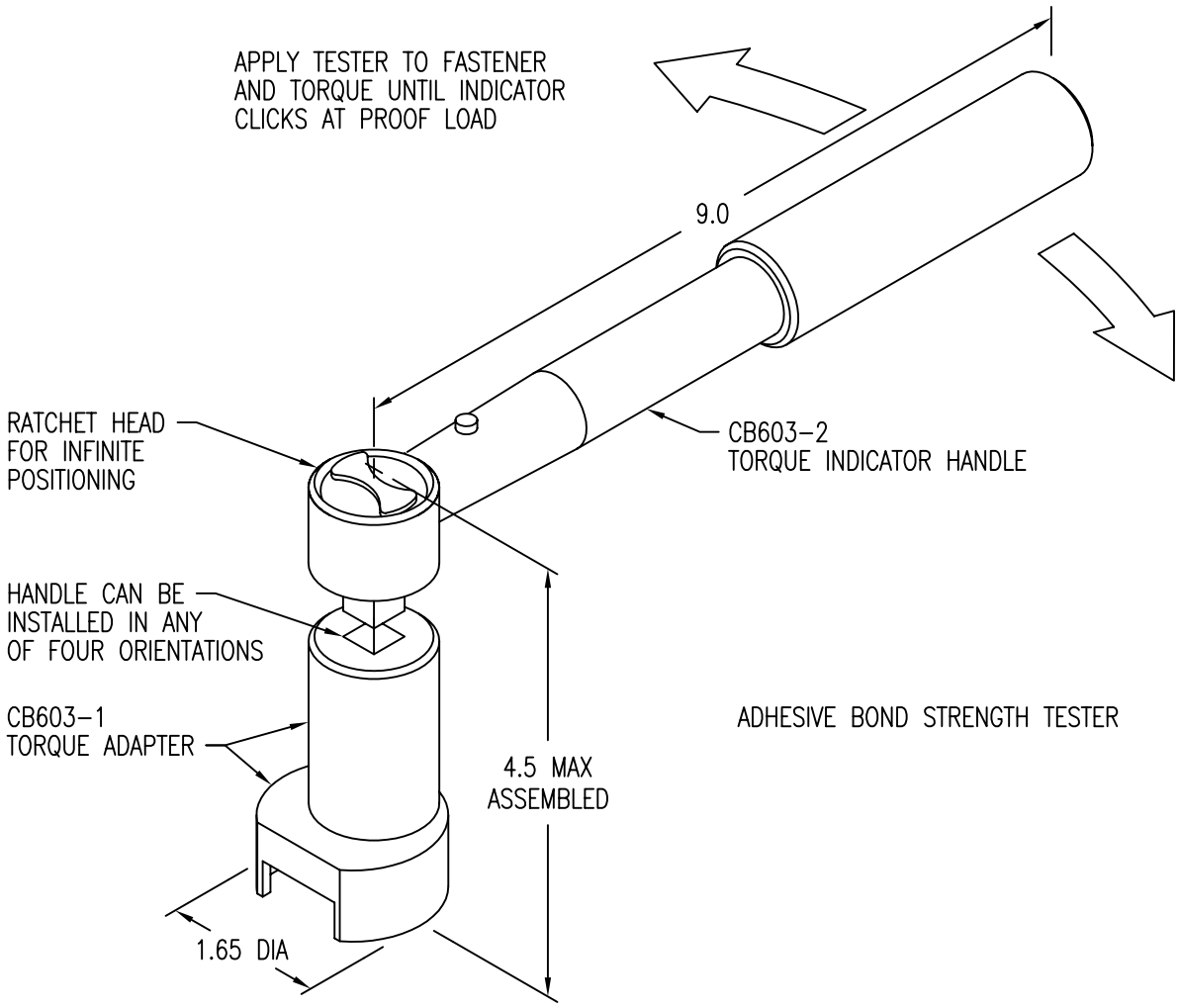

ADHESIVE BOND STRENGTH TESTER

USE TO TEST THE ADHESIVE BOND STRENGTH OF THE FOLLOWING FASTENERS:

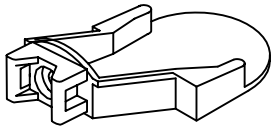

CB4020
RIGHT ANGLE
CABLE TIE MOUNT

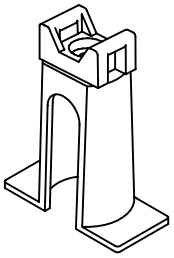

CB4021
STANDOFF
CABLE TIE MOUNT

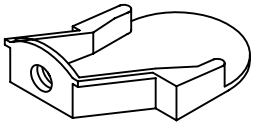

CB4022
RIGHT ANGLE
NUT PLATE

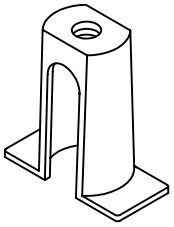

CB4023
STANDOFF
NUT PLATE

UNLESS OTHERWISE SPECIFIED, ALL DIMENSIONS ARE IN INCHES AND TOLERANCES ARE AS SHOWN BELOW. DIMENSIONAL TOLERANCES AND SYMBOLS PER ANSI Y14.5M-1982.

PROPRIETARY PARTS SHOWN IN THIS DRAWING ARE THE SUBJECT OF ISSUED UNITED STATES AND FOREIGN PATENTS AND PATENTS PENDING.
UNAUTHORIZED REPRODUCTION AND/OR DISTRIBUTION OF THIS DRAWING IS SPECIFICALLY PROHIBITED.

		APPROVALS		DATE
ANGLES	±1°	DRAWN	BSP	18JUN02
.XX	±.03	CHECKED	DAC	18JUN02
.XXX	±.010	RELEASED	CGH	20JUN02
.XXXX	±.001	REVISED	BSP	18JUN02

CLICK BOND

CARSON CITY
NEVADA 89706

TITLE
TESTER, ADHESIVE BOND STRENGTH

SIZE	CAGE CODE	DWG. NO.	REV.
A	66530	CB603	4

SCALE 1/2 | 18JUN02 | SHEET 1 OF 1